VMI Northstar®

Toyota Sienna

SIDE ENTRY, POWER IN-FLOOR RAMP

The first and only *all-wheel drive capable* wheelchair accessible van!

The Toyota Sienna comes jam-packed with innovative features that you won't find anywhere else, such as the ParkSmart™ parking sensor, enhanced interior lighting, patented wheel well covers, galvanneal steel construction that mitigates rust and corrosion, independent ramp backup system, Access360® interior space, one-year free mobility roadside assistance membership, and more.

29.3"	56.1"	30"	58.75"	1000LB
DOOR OPENING WIDTH	DOOR OPENING HEIGHT	RAMP WIDTH	TALL HEADROOM	RAMP CAPACITY

Drive with confidence and peace of mind even in harsh weather conditions and rough terrain with the Toyota Sienna all-wheel drive (AWD) system.

The first retail *hybrid* wheelchair accessible vehicle with a combined 36 MPG* fuel efficiency!

And, it's loaded with all the original equipment convenience features, such as:

All-Hybrid Powertrain · All-Wheel Drive Capability · Remote Keyless Entry · Toyota Safety Sense
Apple CarPlay · Blind Spot Monitor · Audio System with 6 Speakers, and much more!

855-VMI-VANS • **vmi**vans.com • 5202 S 28th Place **Phoenix,** AZ 85040
(864-8267)

ParkSmart™

The only parking sensor designed to help customers avoid getting blocked in while away from their vehicle.

Wheel Well Covers

Patented covers create a sleek look and minimize appearance of the wheel well gap, typically seen with converted vehicles.

Interior Lighting

Light up your ride with LED interior floor and ramp lighting at the touch of a button.

Interchangeable Seats

Removable and interchangeable driver and passenger seats for optimal flexibility.

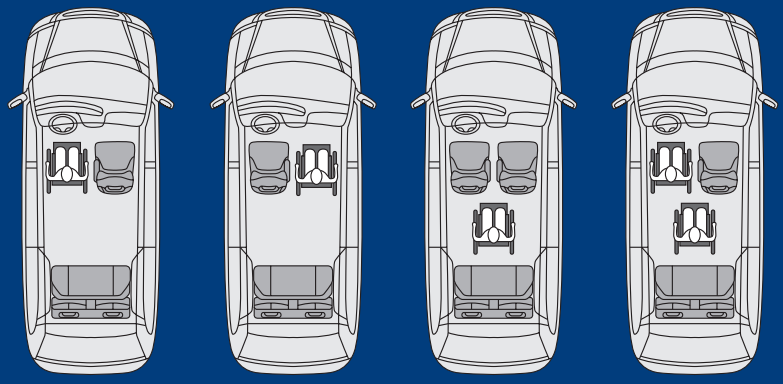

Flexible Seating Options

Multiple seating options for VMI's Toyota Sienna Northstar conversion allow for independence and flexibility. Wheelchair users can choose to sit in the front driver or passenger position or ride in the middle of the vehicle. This diagram shows possible seating options.

Specifications

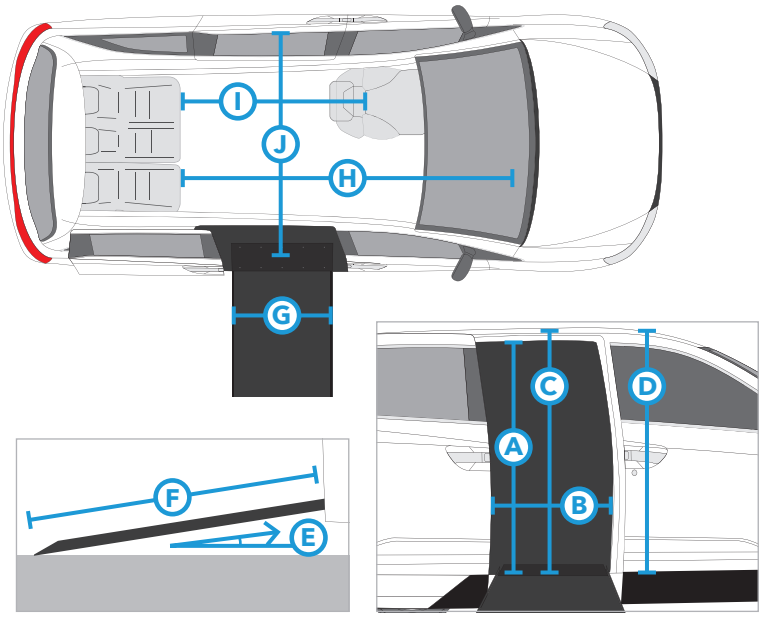

	NORTHSTAR	
A	Door Opening Height (sliding passenger)	56.1″
B	Door Opening Width (sliding passenger)	29.3″
C	Interior Height at Center Position	58.5″
D	Interior Height at Front Position (w/out sunroof)	58.75″
E	Ramp Angle (with PowerKneel®)	8.8°
F	Ramp Length (angled ramp and transition plate)	58.5″
G	Ramp Width (usable)	30″
	Ramp Capacity	1000 lbs
H	Floor Length Overall	86″
I	Floor Length Behind Front Seats (from B pillar)	56″
J	Floor Width at Mid-Row	59.75″
	Ground Clearance	5.6″
	Overall Vehicle Height	77.75″
	Seating Capacity	up to 6**

*35 combined MPG for AWD. ** Select vehicle trim models require a seat reduction kit. Please contact us to verify if a kit is required for your exact model.
Seating options may vary. Specifications apply to VMI Toyota Sienna 2021 vehicles with a Northstar conversion. Measurements may vary based on vehicle trim levels and environmental factors. To ensure best vehicle fit, please visit with your local dealer to confirm vehicle measurements prior to purchase. All information is subject to change without notice. © 2021 Vantage Mobility International. All rights reserved.

8/19/21

855-VMI-VANS • **vmi**vans.com • 5202 S 28th Place **Phoenix,** AZ 85040
(864-8267)